Cambridge Assessment International Education

Cambridge IGCSE™

CANDIDATE NAME	

CENTRE NUMBER						CANDIDATE NUMBER				

6150262328

DESIGN & TECHNOLOGY **0445/41**

Paper 4 Systems & Control **May/June 2020**

1 hour

You must answer on the question paper.

No additional materials are needed.

INSTRUCTIONS

- Section A: answer **all** questions.
- Section B: answer **one** question.
- Use a black or dark blue pen. You may use an HB pencil for any diagrams or graphs.
- Write your name, centre number and candidate number in the boxes at the top of the page.
- Answer in the space provided.
- Do **not** use an erasable pen or correction fluid.
- Do **not** write on any bar codes.
- You may use a calculator.

INFORMATION

- The total mark for this paper is 50.
- The number of marks for each question or part question is shown in brackets [ ].
- All dimensions are in millimetres.

This document has **20** pages. Blank pages are indicated.

DC (PQ) 198122
© UCLES 2020

Section A

Answer **all** questions in this section.

1 The plastic casings of electric tools often include symbols on them.
State the meaning of the symbols shown in Fig. 1.1.

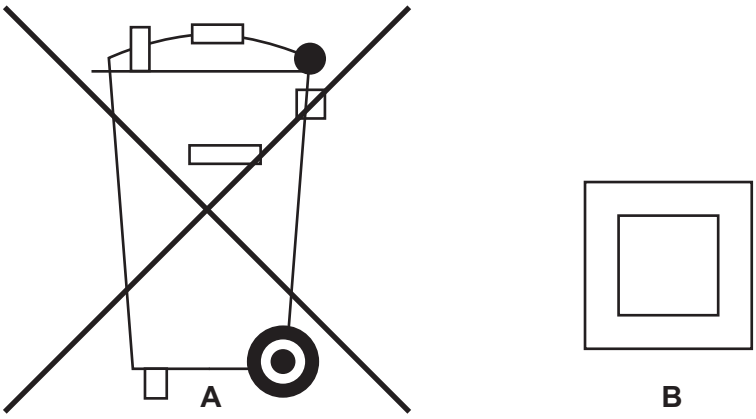

Fig. 1.1

A .....

B .....
[2]

2 Fig. 2.1 shows a set of tools for removing the screws used to secure plastic casings.

Fig. 2.1

Fig. 2.2

(a) Give **one** reason why a slotted head screw would not be used in a plastic casing for an electronic product.

..... [1]

(b) Give **two** benefits of the tools shown in Fig. 2.2.

1 .....

.....

2 .....

.....

[2]

3 Three examples of structures are shown in Fig. 3.1.

A

B

C

Fig. 3.1

Add ticks (✓) to complete Table 3.1 to identify the type of structure and whether it is natural or man-made.
Two have been completed.

Table 3.1

	shell	mass	frame	natural	man-made
A					✓
B					
C	✓				

[4]

4 State the meaning of the term ‘static load’ in structural design.

..... [1]

5 A spanner is an example of a second order lever.
Draw a different example of a second order lever and show the position of the fulcrum, effort, and load.

[4]

6 Spur gears can be used to transmit motion from one shaft to another.
Draw an arrangement showing the minimum number of spur gears which will allow two shafts to rotate in the same direction.

[2]

© UCLES 2020

7 Fig. 7.1 shows two parts of a machine where movement takes place in the directions shown.

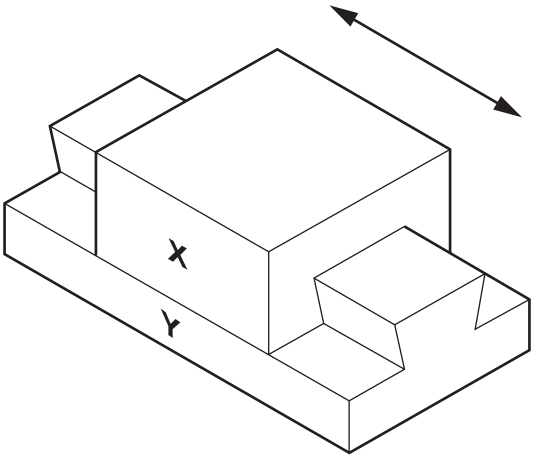

Fig. 7.1

(a) Give **one** method of reducing friction between parts **X** and **Y**.

..... [1]

(b) Name the type of motion indicated in Fig. 7.1.

..... [1]

8 Different values of voltage are shown below.

0.7 V **19 μV** **800 mV** **1.9 MV** **120 kV**

Complete Table 8.1 by placing the voltage values in ascending order showing the lowest value on the left.

Table 8.1

lowest value						highest value

[4]

9 Fig. 9.1 shows three symbols used in electronic circuits.

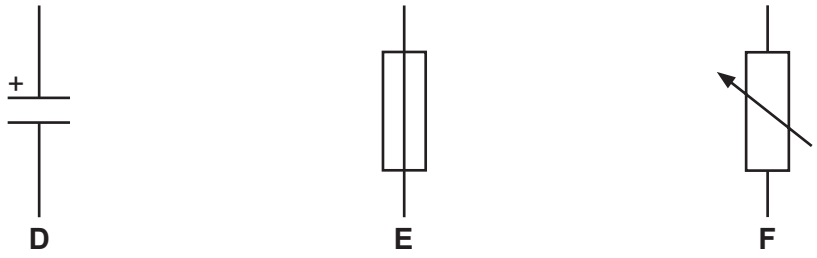

Fig. 9.1

State the meaning of each symbol.

D .....

E .....

F .....
[3]

Section B

Answer **one** question from this section.

10 **(a)** **(i)** Describe what is meant by a 'moment' in a structure.

.....

.....

..... [2]

(ii) State the unit that is used in calculations to define a moment.

..... [1]

(b) Fig. 10.1 shows a see-saw with the position of two loads marked.

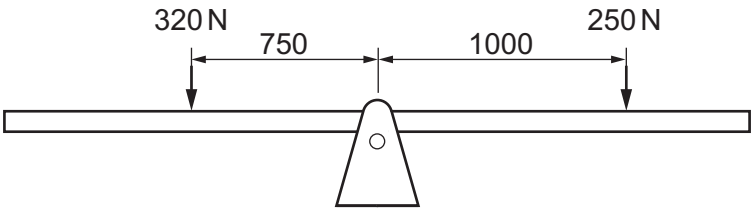

Fig. 10.1

Calculate the moments and state the effect on the see-saw when the loads are applied.

.....

.....

.....

..... [3]

(c) Use sketches and notes to describe the difference between a strut and a tie in a structure.

[3]

(d) Fig. 10.2 shows sections through three different beams used in structures.

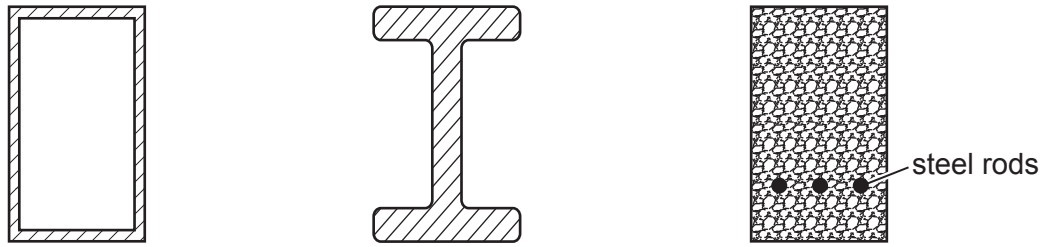

A
steel box section

B
steel 'I' section

C
concrete

Fig. 10.2

(i) Give **one** different benefit of using each beam.

A .....

.....

B .....

.....

C .....

.....
[3]

(ii) Explain why the beams in Fig. 10.2 are placed on their narrow edge when in use.

.....

.....

..... [2]

(iii) Explain why the concrete beam needs steel rods cast into it.

.....

.....

.....

..... [3]

(e) Fig. 10.3 shows a bridge constructed from steel tubes.

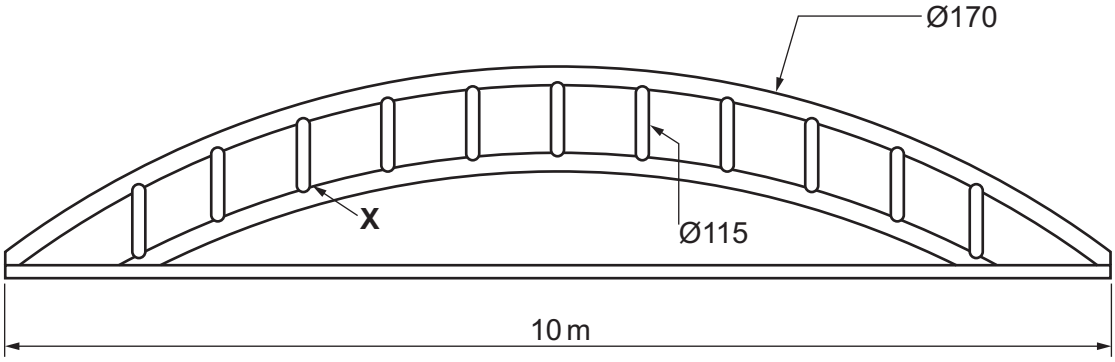

Fig. 10.3

(i) State the most suitable method of joining the tubes.

..... [1]

(ii) Use sketches and notes to show **two** methods of reinforcing the joint at point **X**.

[4]

(iii) Explain why a *Factor of Safety* will have been considered by designers of the bridge.

.....

.....

.....

..... [3]

11 **(a)** Fig. 11.1 shows three methods of transmitting motion from one shaft to another.

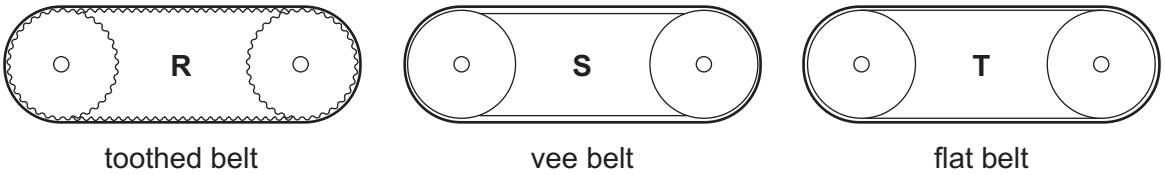

Fig. 11.1

(i) Give **one** different reason for choosing each of the methods shown.

R .....

S .....

T .....
[3]

(ii) Use sketches and notes to show a method of tensioning the flat belt without moving either of the pulley shafts.

[3]

(b) Fig. 11.2 shows the chain drive on a cycle.

Fig. 11.2

(i) Give **two** factors that will affect the length of chain needed.

1 .....

2 .....
[2]

(ii) Fig. 11.3 shows a close-up view of a chain link.

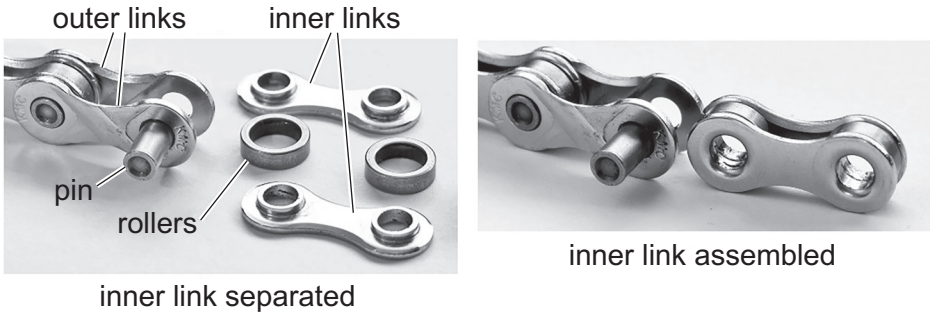

Fig. 11.3

State the type of bearing used in each link of the chain.

..... [1]

(iii) Explain how the operating conditions for the cycle can affect the working life of the chain.

.....

.....

.....

..... [3]

(iv) The cycle has wheels with a diameter of 700 mm, the front chainring has 51 teeth and the rear sprocket has 17 teeth.

Calculate the distance travelled by the cycle during each revolution of the crank.

Use the formula: circumference of wheel = $2\pi r$

.....

.....

.....

..... [3]

(v) Give **one** reason for the drive system on a cycle not being 100% efficient.

..... [1]

(c) Fig. 11.4 shows two methods that can be used to prevent reverse rotation in a mechanism.

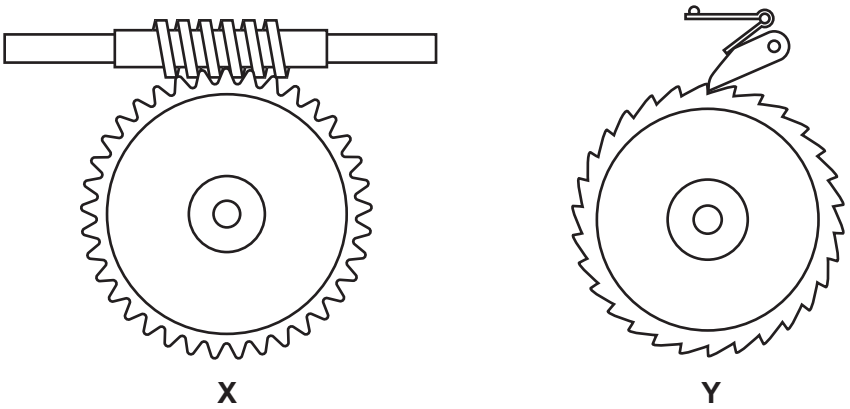

Fig. 11.4

(i) Name each of the methods.

X .....

Y .....
[2]

(ii) Explain how each method can prevent reverse rotation.

Method **X** .....

.....

.....

.....

Method **Y** .....

.....

.....

.....
[4]

(d) Fig. 11.5 shows part of a steam engine.

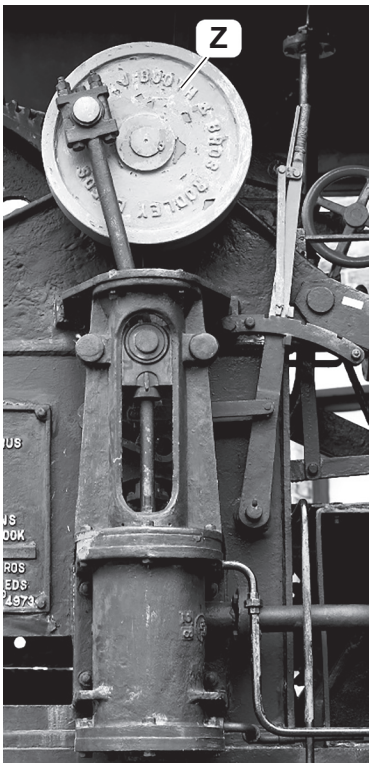

Fig. 11.5

(i) Name component **Z**.

..... [1]

(ii) Describe the conversion of motion caused by component **Z**.

.....

.....

..... [2]

12 **(a)** Fig. 12.1 shows a design for a printed circuit board (PCB) layout.

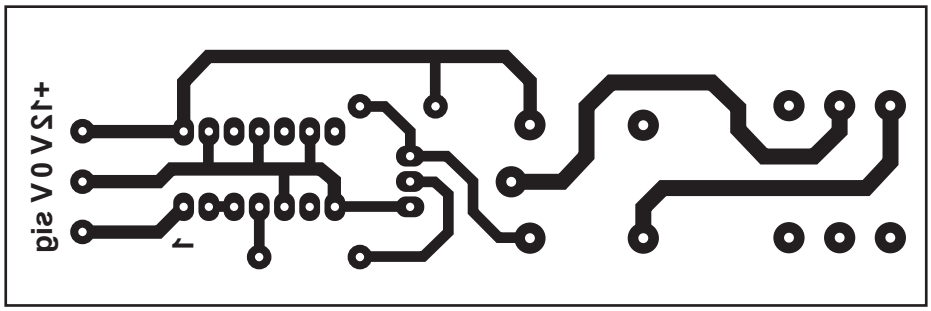

Fig. 12.1

(i) Give **one** reason for making tracks in the layout as wide as possible.

.....

..... [1]

(ii) Fig. 12.2 shows five components that can be soldered into a PCB.

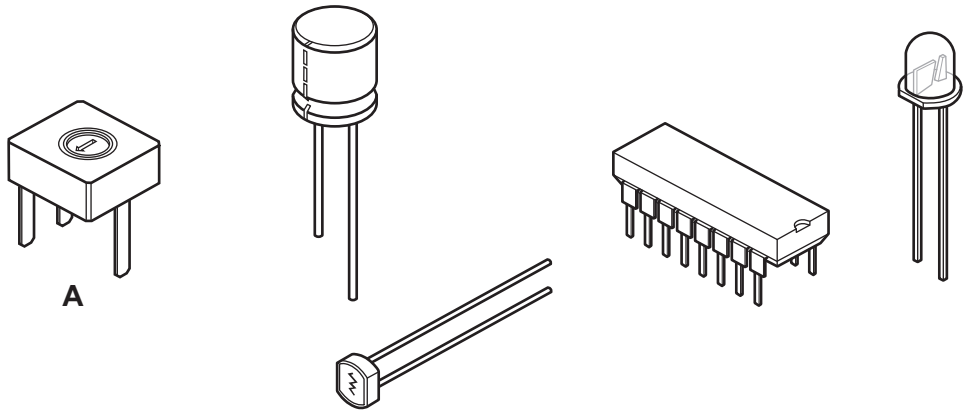

Fig. 12.2

Circle **two** components that must have precise pad spacing on the layout. [2]

(iii) Use sketches and notes to show how component **A** can be used as a potential divider.

[2]

(iv) Fig. 12.3 shows a screw terminal block that can be used to make connections to a circuit board.

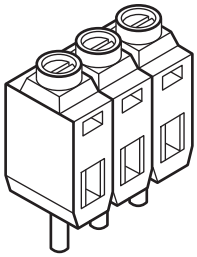

Fig. 12.3

Give **two** benefits of using a screw terminal block as a method of connection.

1 .....

.....

2 .....

.....
[2]

(b) Fig. 12.4 shows part of a relay circuit that uses a low voltage circuit to control a higher voltage.

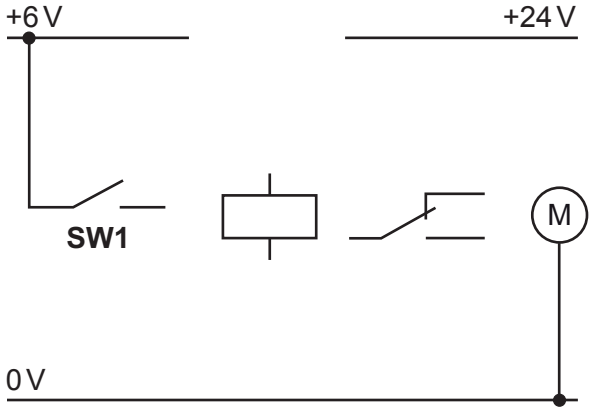

Fig. 12.4

(i) Complete the connections to show how the 24 V motor could be controlled by **SW1**. [4]

(ii) The motor has a current draw of 1.75 A under normal load.
Calculate the power rating of the motor.

Use the formula: $P = VI$.

.....

.....

..... [3]

(iii) State **two** features that should be considered when choosing a suitable relay from a supplier's catalogue.

1 .....

.....

2 .....

.....
[2]

(c) A transistor can be used as a high speed electronic switch.
Draw the circuit symbol for an NPN transistor and label the pins.

[2]

(d) Fig. 12.5 shows an astable circuit with an output frequency of 1 Hz.

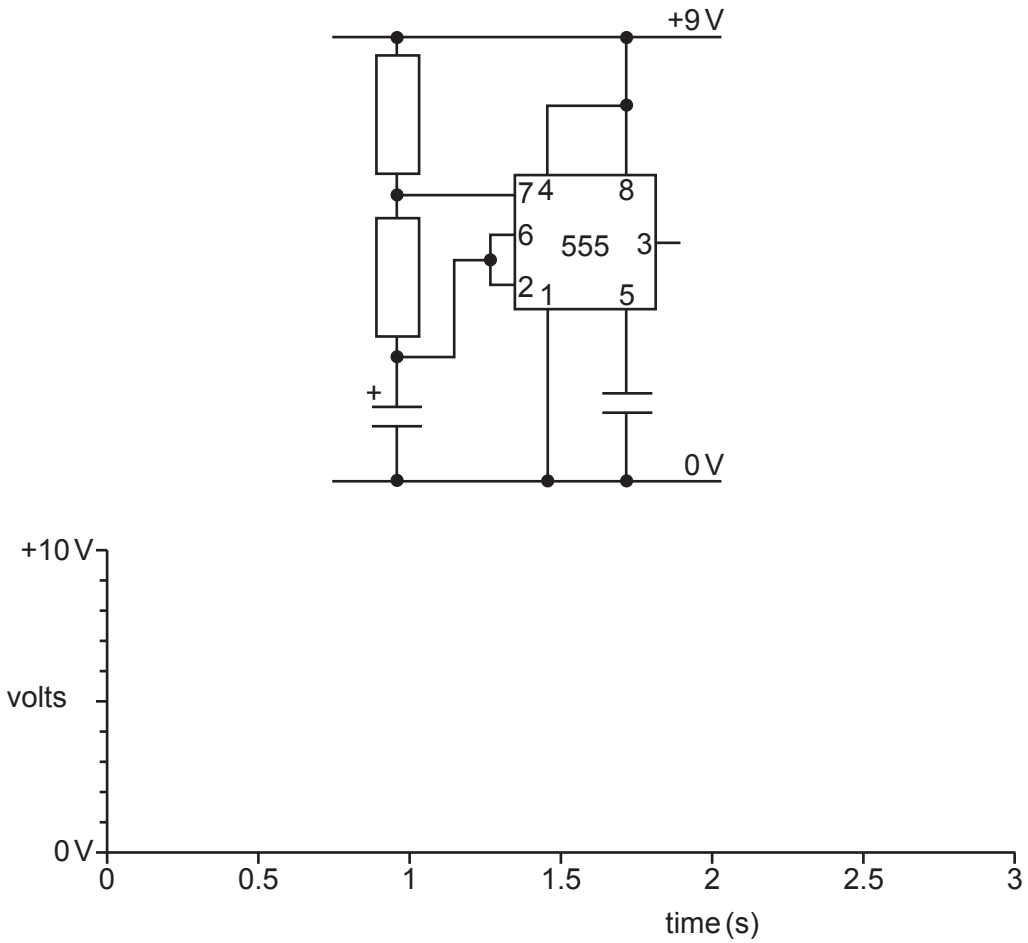

Fig. 12.5

Complete the graph in Fig. 12.5 to show the astable output signal. [2]

(e) Fig. 12.6 shows a circuit to allow either one of two switches to control a single lamp. Each time a switch is operated the state of the lamp will change.

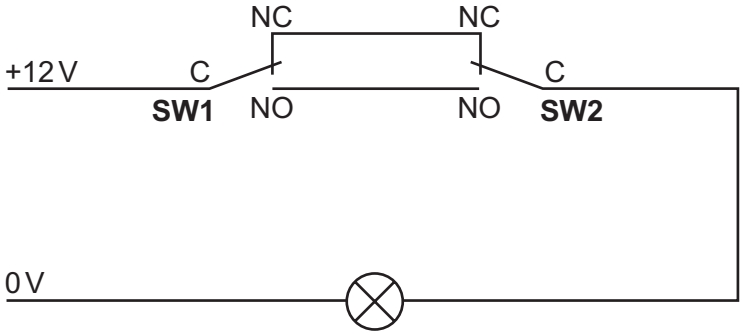

Fig. 12.6

(i) Explain how the circuit works.

.....

.....

.....

.....

..... [3]

(ii) Logic gates can be used to control outputs.
Draw the symbol and truth table for a logic gate that will switch on an output if either one, or both inputs are switched on.

[2]

BLANK PAGE

BLANK PAGE

Permission to reproduce items where third-party owned material protected by copyright is included has been sought and cleared where possible. Every reasonable effort has been made by the publisher (UCLES) to trace copyright holders, but if any items requiring clearance have unwittingly been included, the publisher will be pleased to make amends at the earliest possible opportunity.

To avoid the issue of disclosure of answer-related information to candidates, all copyright acknowledgements are reproduced online in the Cambridge Assessment International Education Copyright Acknowledgements Booklet. This is produced for each series of examinations and is freely available to download at www.cambridgeinternational.org after the live examination series.

Cambridge Assessment International Education is part of the Cambridge Assessment Group. Cambridge Assessment is the brand name of the University of Cambridge Local Examinations Syndicate (UCLES), which itself is a department of the University of Cambridge.

© UCLES 2020